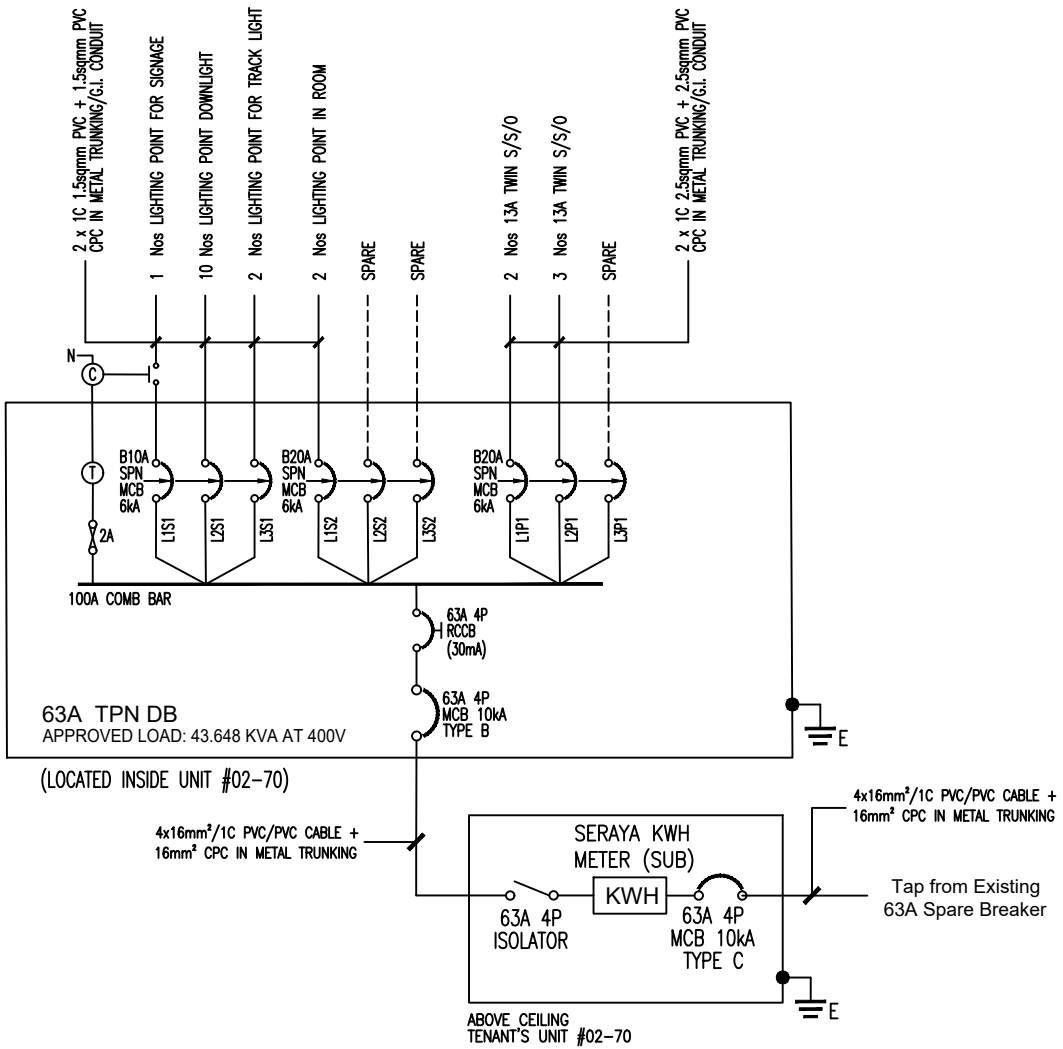

CLIENT / ADDRESS :	MAIN CONTRACTOR :	ELECTRICAL CONTRACTOR :	DRAWING TITLE :	LEW :	CHECKED :	DATE :
UNIVERSAL OPTICAL Square 2 10 Sinaran Drive,#02-70, Singapore 307506	Yi Plasters Pte Ltd 11 Mandai Estate #06-06 Eldix Industrial Building Singapore 729908 Tel: 6710 4955	Yi Plasters Pte Ltd 11 Mandai Estate #06-06 Eldix Industrial Building Singapore 729908 Tel: 6710 4955	SINGLE LINE DIAGRAM (SLD)	Seow Swee Leong EMA Licence No. : 8/25825		18 Jul 2025
					DRAWING NO. : I2R-YI-UO-SLD	REV : 0

LEGEND

LOGO	PRODUCT	QTY
	1G SWITCH	1
	2G SWITCH	1
	LED DOWNLIGHT	12
	TRACK LIGHT	8M
SIGN	SIGNAGE	

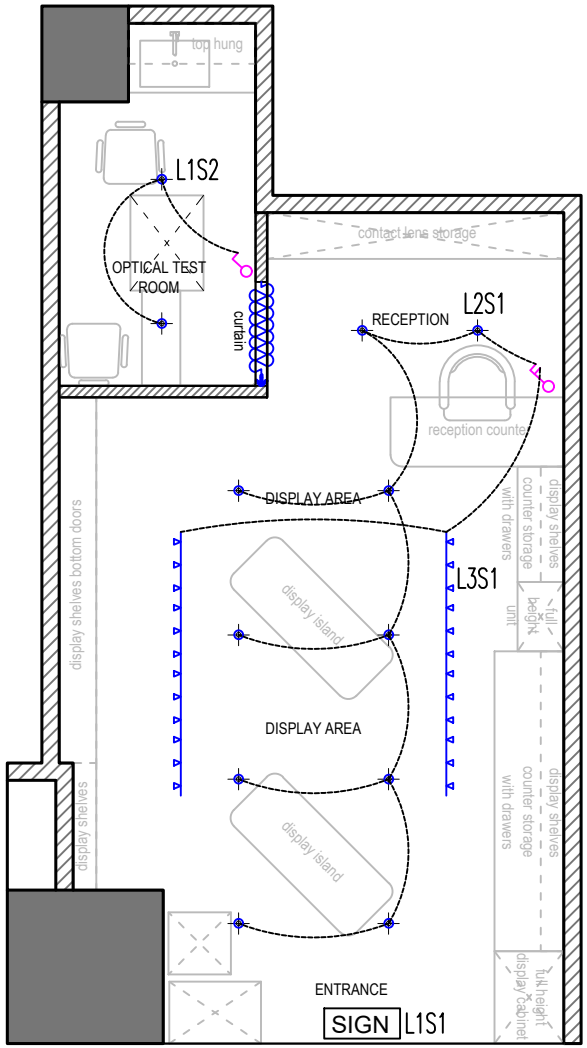

CLIENT / ADDRESS :	MAIN CONTRACTOR :	ELECTRICAL CONTRACTOR :	DRAWING TITLE :	LEW :	CHECKED :	DATE :
UNIVERSAL OPTICAL Square 2 10 Sinaran Drive,#02-70, Singapore 307506	Yi Plasters Pte Ltd 11 Mandai Estate #06-06 Eldix Industrial Building Singapore 729908 Tel: 6710 4955	Yi Plasters Pte Ltd 11 Mandai Estate #06-06 Eldix Industrial Building Singapore 729908 Tel: 6710 4955	LIGHTING LAYOUT	Seow Swee Leong EMA Licence No. : 8/25825		18 Jul 2025
					DRAWING NO. : I2R-YI-UO-LGT	REV : 0

LEGEND

LOGO	PRODUCT	QTY
	13A TWIN SSO	5
	DB	

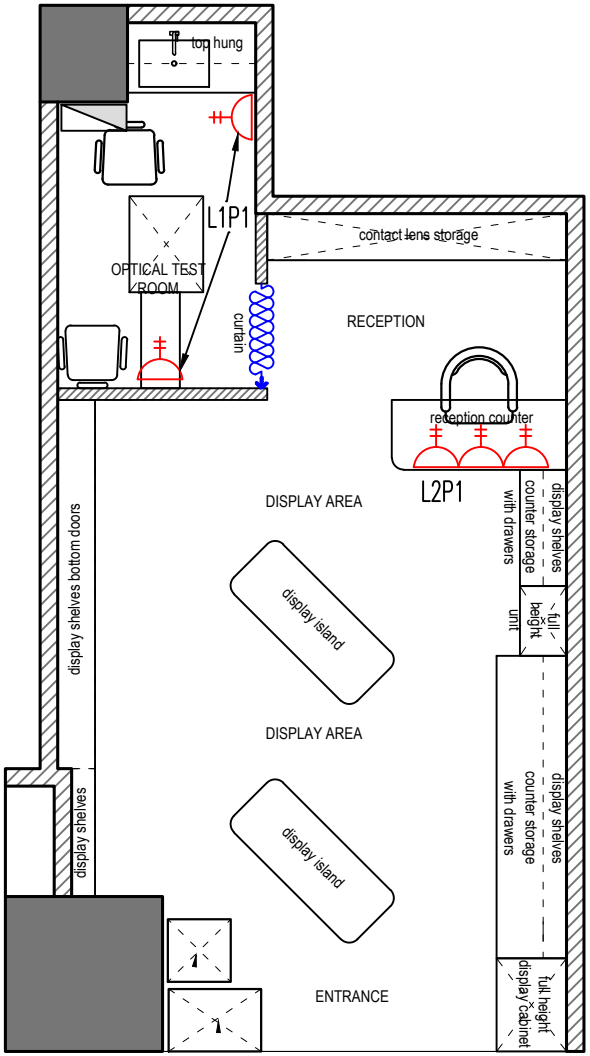

CLIENT / ADDRESS :	MAIN CONTRACTOR :	ELECTRICAL CONTRACTOR :	DRAWING TITLE :	LEW :	CHECKED :	DATE :
UNIVERSAL OPTICAL Square 2 10 Sinaran Drive,#02-70, Singapore 307506	Yi Plasters Pte Ltd 11 Mandai Estate #06-06 Eldix Industrial Building Singapore 729908 Tel: 6710 4955	Yi Plasters Pte Ltd 11 Mandai Estate #06-06 Eldix Industrial Building Singapore 729908 Tel: 6710 4955	SOCKET LAYOUT	Seow Swee Leong EMA Licence No. : 8/25825		18 Jul 2025
					DRAWING NO. : I2R-YI-UO-SOC	REV : 0